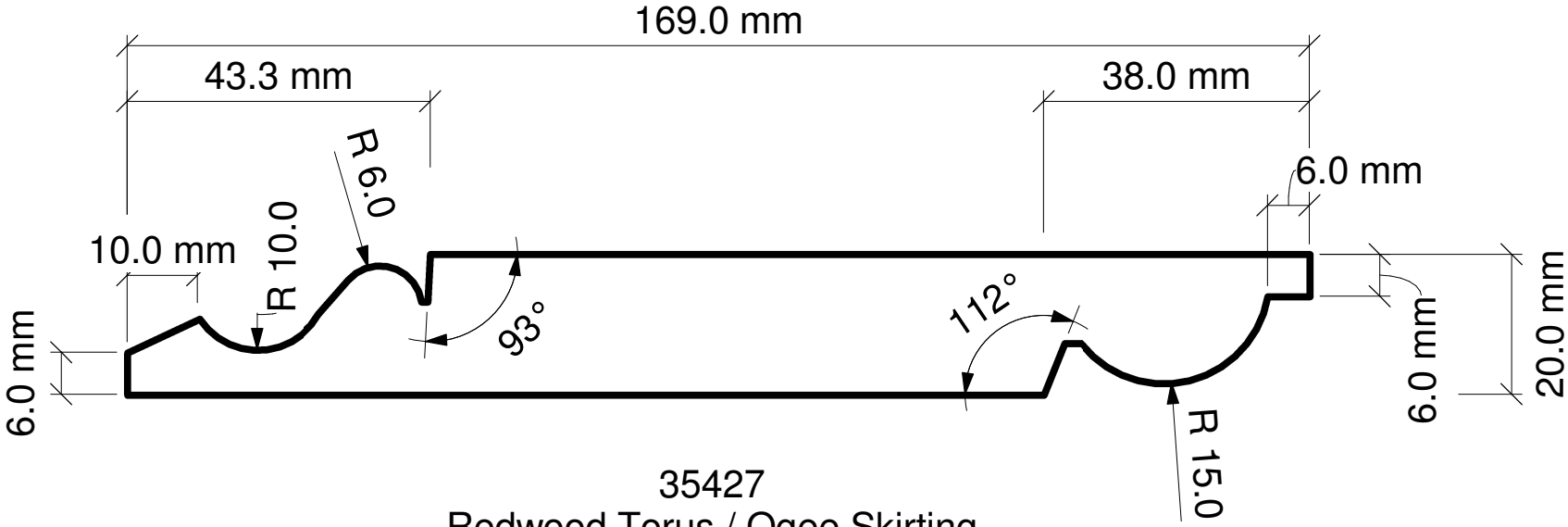

35427
Redwood Torus / Ogee Skirting
Premier Grade 20mm x 169mm PEFC

Redwood Torus / Ogee Skirting
Premier Grade 20mm x 169mm PEFC

35427